FLOS

F0001047 Rusty Brown

Skygarden 1

Designed by Marcel Wanders, 2007



Halogen - 150W

Suspension lamp emitting diffused light. Features a plaster dome with white interior, dome support in die-cast aluminium alloy and diffuser in flashed and blown opal glass. Decoration in photo-etched and mechanically drawn AISI 304 stainless steel. Ceiling attachment in moulded, galvanised steel with injection-moulded PA6 rose.

Designed by Marcel Wanders in 2007, Skygarden was inspired by the ornate plaster ceiling in his former home. Reluctant to leave it behind when he moved, Wanders preserved its beauty in this striking pendant lamp. From the outside, Skygarden is sleek and minimal, but step beneath it and a secret garden is revealed: delicate floral detailing cast in white plaster. A poetic fusion of classical craft and contemporary design, Skygarden brings hidden beauty into everyday space.

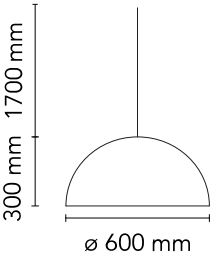

Are you a professional and your project needs consulting and support?

BOOK AN APPOINTMENT

Main specifications

EAN	8059607012789
Mounting	Suspension
Environments	Indoor dry location
Light source type	Bulb
Light sources included	No
Lamp category	Halogen
Lamp holders	E27
Ilcos	HSGS
Number of lamps	1
Power (W)	150

Physical

Colour	Rusty Brown
Length (mm)	600
Cord colour	Clear
Cord length (mm)	1700
Canopy length/diameter (mm)	146
Canopy height (mm)	36
Net weight (kg)	12.35
Package height (mm)	435
Package width (mm)	730
Package length (mm)	730
Package volume (m3)	0.23
IP internal	20

Download

Mounting instructions PDF

Photometric Files

LDT / IES LDT

Technical Drawings

2D ZIP

3D ZIP

©2026 Flos - P.IVA 00290820174 - 10/31/2026

In our constantly evolving world and business, technical upgrades happen every day. This means all product specifications and data are subject to change without warning in order t improve reliability, function, performance or otherwise. We make every effort to ensure the accuracy of our product images, however due to different lighting and screens used for viewing, the colours may vary. Images are indicative of the quality and style of the product but may not represent the precise details of the product you receive. This is because we are constantly working to make improvements. For aesthetic reasons, cables and/or electrical elements are often not shown. Refer to technical data sheets for all technical data. Images and colours are not part of any contract or warranty in any way.

IP
20

Schematic light drawing

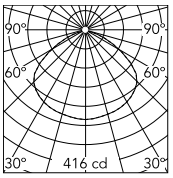

Luminous flux luminaire
2400 lm

Beam Angle: 118°

h(m)	E(lx)	D(m)
1	416	3.36
2	104	6.72
3	46	10.08
4	26	13.44
5	17	16.79

Photometric

Lighting type	Direct
Light distribution	Symmetric
Extreme cut off	No

Electrical

Insulation class	I
Frequency (Hz)	50/60
Main voltage (Vac)	220-250
Dimmable	Yes
Dimming interface	Remote Dimmable (Dimmer Not Included)
Batteries inside	No

©2026 Flos - P.IVA 00290820174 - 10/31/2026

In our constantly evolving world and business, technical upgrades happen every day. This means all product specifications and data are subject to change without warning in order t improve reliability, function, performance or otherwise. We make every effort to ensure the accuracy of our product images, however due to different lighting and screens used for viewing, the colours may vary. Images are indicative of the quality and style of the product but may not represent the precise details of the product you receive. This is because we are constantly working to make improvements. For aesthetic reasons, cables and/or electrical elements are often not shown. Refer to technical data sheets for all technical data. Images and colours are not part of any contract or warranty in any way.

Bulbs



NOT INCLUDED

RF29388

LED T46 Lamp E27 20W 2700K
Dimmable

©2026 Flos - P.IVA 00290820174 - 10/31/2026

In our constantly evolving world and business, technical upgrades happen every day. This means all product specifications and data are subject to change without warning in order t improve reliability, function, performance or otherwise. We make every effort to ensure the accuracy of our product images, however due to different lighting and screens used for viewing, the colours may vary. Images are indicative of the quality and style of the product but may not represent the precise details of the product you receive. This is because we are constantly working to make improvements. For aesthetic reasons, cables and/or electrical elements are often not shown. Refer to technical data sheets for all technical data. Images and colours are not part of any contract or warranty in any way.

Spare Parts

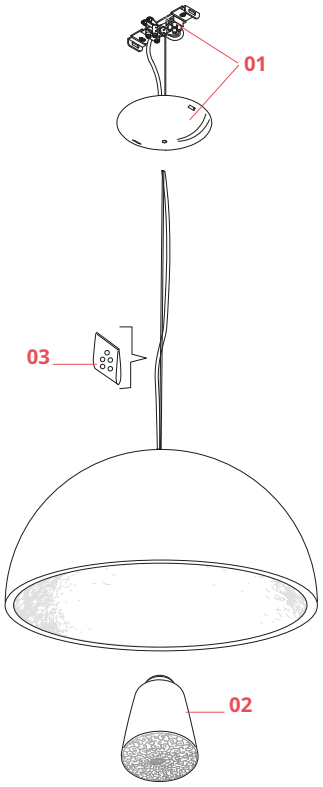

01.	Rust ceiling rose assembly	RF6410147
02.	Skygarden 1 glass diffuser	RF6410100
03.	Kit of 5 or rings	RF05382

©2026 Flos - P.IVA 00290820174 - 10/31/2026

In our constantly evolving world and business, technical upgrades happen every day. This means all product specifications and data are subject to change without warning in order t improve reliability, function, performance or otherwise. We make every effort to ensure the accuracy of our product images, however due to different lighting and screens used for viewing, the colours may vary. Images are indicative of the quality and style of the product but may not represent the precise details of the product you receive. This is because we are constantly working to make improvements. For aesthetic reasons, cables and/or electrical elements are often not shown. Refer to technical data sheets for all technical data. Images and colours are not part of any contract or warranty in any way.



RF6410147

Rust ceiling rose assembly



RF6410100

Skygarden 1 glass diffuser

RF05382

Kit of 5 or rings

©2026 Flos - P.IVA 00290820174 - 10/31/2026

In our constantly evolving world and business, technical upgrades happen every day. This means all product specifications and data are subject to change without warning in order t improve reliability, function, performance or otherwise. We make every effort to ensure the accuracy of our product images, however due to different lighting and screens used for viewing, the colours may vary. Images are indicative of the quality and style of the product but may not represent the precise details of the product you receive. This is because we are constantly working to make improvements. For aesthetic reasons, cables and/or electrical elements are often not shown. Refer to technical data sheets for all technical data. Images and colours are not part of any contract or warranty in any way.