FLOS

F3175059 Brass

IC Lights S1

Designed by Michael Anastassiades, 2014



Halogen - 60W

Suspension lamp emitting diffused light. Features a metal frame available in brushed and transparent varnished brass, chrome-plated steel or black, with a blown opal glass diffuser.

Part of the IC Lights series by Michael Anastassiades, a collection that explores balance, movement and identity through minimal, poetic forms. Designed in 2014, the series was inspired by the dexterity of a contact juggler and the visual tension of a sphere poised in perfect equilibrium. Like the other pieces in the IC Light Series, this lamp balances designer Anastassiades' love of industrial simplicity with intricate symbolism.

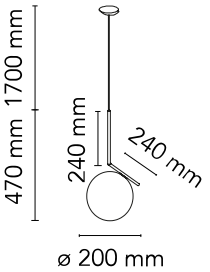

Are you a professional and your project needs consulting and support?

BOOK AN APPOINTMENT

Main specifications

EAN	8059607003336
Mounting	Suspension
Environments	Indoor dry location
Light source type	Bulb
Light sources included	No
Lamp category	Halogen
Lamp holders	E14
Ilcos	HSGS
Number of lamps	1
Power (W)	60

Physical

Colour	Brass
Length (mm)	200
Cord colour	Black
Cord length (mm)	1700
Canopy colour	Brass
Canopy length/diameter (mm)	113
Canopy height (mm)	32
Net weight (kg)	1.4
Package volume (m3)	0.05
IP internal	20

Download

Mounting instructions PDF

Photometric Files

LDT / IES LDT

Technical Drawings

2D ZIP

3D ZIP

©2026 Flos - P.IVA 00290820174 - 10/31/2026

In our constantly evolving world and business, technical upgrades happen every day. This means all product specifications and data are subject to change without warning in order t improve reliability, function, performance or otherwise. We make every effort to ensure the accuracy of our product images, however due to different lighting and screens used for viewing, the colours may vary. Images are indicative of the quality and style of the product but may not represent the precise details of the product you receive. This is because we are constantly working to make improvements. For aesthetic reasons, cables and/or electrical elements are often not shown. Refer to technical data sheets for all technical data. Images and colours are not part of any contract or warranty in any way.

GWT 850°

IP 20

IK 07

Schematic light drawing

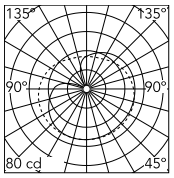

Luminous flux luminaire
689 lm

Photometric

Lighting type	Total
Light distribution	Asymmetric
Extreme cut off	No

Electrical

Insulation class	I
Frequency (Hz)	50/60
Main voltage (Vac)	220-250
Dimmable	Yes
Dimming interface	Remote Dimmable (Dimmer Not Included)
Batteries inside	No

©2026 Flos - P.IVA 00290820174 - 10/31/2026

In our constantly evolving world and business, technical upgrades happen every day. This means all product specifications and data are subject to change without warning in order t improve reliability, function, performance or otherwise. We make every effort to ensure the accuracy of our product images, however due to different lighting and screens used for viewing, the colours may vary. Images are indicative of the quality and style of the product but may not represent the precise details of the product you receive. This is because we are constantly working to make improvements. For aesthetic reasons, cables and/or electrical elements are often not shown. Refer to technical data sheets for all technical data. Images and colours are not part of any contract or warranty in any way.

Bulbs

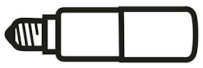

NOT INCLUDED

RF37192

LED Lamp 7,5W E14 220-240V 2700K T28



NOT INCLUDED

RF32290

LED Lamp E14 8W 2700K T28

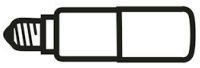

NOT INCLUDED

RF37193

LED Lamp 7,5W E14 220-240V 3000K T28



NOT INCLUDED

RF32291

LED Lamp E14 8W 3000K T28

©2026 Flos - P.IVA 00290820174 - 10/31/2026

In our constantly evolving world and business, technical upgrades happen every day. This means all product specifications and data are subject to change without warning in order t improve reliability, function, performance or otherwise. We make every effort to ensure the accuracy of our product images, however due to different lighting and screens used for viewing, the colours may vary. Images are indicative of the quality and style of the product but may not represent the precise details of the product you receive. This is because we are constantly working to make improvements. For aesthetic reasons, cables and/or electrical elements are often not shown. Refer to technical data sheets for all technical data. Images and colours are not part of any contract or warranty in any way.

Spare Parts

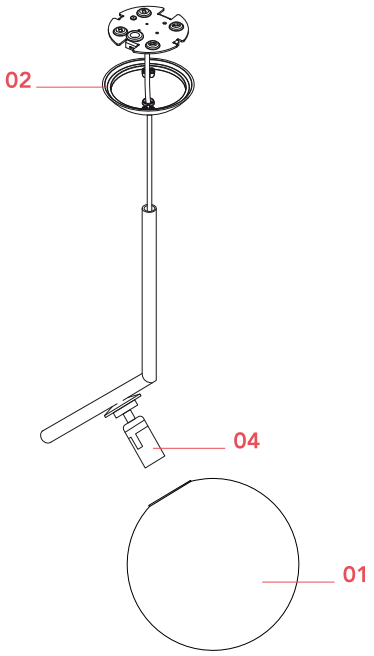

01.	IC Lights 1 diffuser for brass version	F3136059
02.	Ic Suspension 1/Suspension 2 brass ceiling rose assembly	RF3170359
03.	Kit with screws and allen key	RF3160100
04.	Ic Suspension 1 E14 lamp holder assemly	RF3170100

©2026 Flos - P.IVA 00290820174 - 10/31/2026

In our constantly evolving world and business, technical upgrades happen every day. This means all product specifications and data are subject to change without warning in order t improve reliability, function, performance or otherwise. We make every effort to ensure the accuracy of our product images, however due to different lighting and screens used for viewing, the colours may vary. Images are indicative of the quality and style of the product but may not represent the precise details of the product you receive. This is because we are constantly working to make improvements. For aesthetic reasons, cables and/or electrical elements are often not shown. Refer to technical data sheets for all technical data. Images and colours are not part of any contract or warranty in any way.



F3136059

IC Lights 1 diffuser for brass version



RF3170359

Ic Suspension 1/Suspension 2 brass ceiling rose assembly



RF3160100

Kit with screws and allen key



RF3170100

Ic Suspension 1 E14 lamp holder assemly

©2026 Flos - P.IVA 00290820174 - 10/31/2026

In our constantly evolving world and business, technical upgrades happen every day. This means all product specifications and data are subject to change without warning in order t improve reliability, function, performance or otherwise. We make every effort to ensure the accuracy of our product images, however due to different lighting and screens used for viewing, the colours may vary. Images are indicative of the quality and style of the product but may not represent the precise details of the product you receive. This is because we are constantly working to make improvements. For aesthetic reasons, cables and/or electrical elements are often not shown. Refer to technical data sheets for all technical data. Images and colours are not part of any contract or warranty in any way.