FLOS

F2500000 Chrome

Frisbi

Designed by Achille Castiglioni, 1978



Halogen - 105W

Suspension lamp emitting direct, diffused and reflected light. Features injection-moulded opaline PMMA diffuser suspended by three fine steel cables. Reflector in polished, nickel-plated and zapon-varnished stamped sheet metal painted gloss white inside. Ceiling fitting and rose in injection-moulded ABS.

Designed by Achille Castiglioni in 1978, Frisbi transforms a simple disc into an ingenious lighting object. Suspended by nearly invisible steel wires, the diffuser appears to float in space, casting light in three distinct ways. Light is directed downward through a central opening, while the surrounding surface softly illuminates the room. Elegant, witty and highly functional, Frisbi captures Castiglioni's genius for turning everyday forms into design icons.

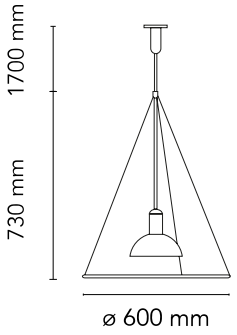

Are you a professional and your project needs consulting and support?

BOOK AN APPOINTMENT

Main specifications

EAN	8059607016206
Mounting	Suspension
Environments	Indoor dry location
Light source type	Bulb
Light sources included	No
Lamp category	Halogen
Lamp holders	E27
Ilcos	HSGSR
Number of lamps	1
Power (W)	105

Physical

Colour	Chrome
Length (mm)	600
Cord colour	Black
Cord length (mm)	1700
Canopy length/diameter (mm)	101
Canopy height (mm)	111
Net weight (kg)	2.5
Package height (mm)	170
Package width (mm)	655
Package length (mm)	655
Package volume (m3)	0.07
IP internal	20

Download

Mounting instructions PDF

Photometric Files

LDT / IES LDT

Technical Drawings

2D ZIP

3D ZIP

©2026 Flos - P.IVA 00290820174 - 10/31/2026

In our constantly evolving world and business, technical upgrades happen every day. This means all product specifications and data are subject to change without warning in order t improve reliability, function, performance or otherwise. We make every effort to ensure the accuracy of our product images, however due to different lighting and screens used for viewing, the colours may vary. Images are indicative of the quality and style of the product but may not represent the precise details of the product you receive. This is because we are constantly working to make improvements. For aesthetic reasons, cables and/or electrical elements are often not shown. Refer to technical data sheets for all technical data. Images and colours are not part of any contract or warranty in any way.

IP 20

IK 00

Schematic light drawing

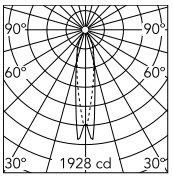

Luminous flux luminaire
858 lm

Beam Angle: 20°

h(m)	E(lx)	D(m)
1	1929	0.36
2	482	0.72
3	214	1.08
4	121	1.44
5	77	1.80

Photometric

Lighting type	Direct
Light distribution	Roto symmetric
Extreme cut off	No

Electrical

Insulation class	II
Frequency (Hz)	50/60
Main voltage (Vac)	220-250
Dimmable	Yes
Dimming interface	Remote Dimmable (Dimmer Not Included)
Batteries inside	No

©2026 Flos - P.IVA 00290820174 - 10/31/2026

In our constantly evolving world and business, technical upgrades happen every day. This means all product specifications and data are subject to change without warning in order t improve reliability, function, performance or otherwise. We make every effort to ensure the accuracy of our product images, however due to different lighting and screens used for viewing, the colours may vary. Images are indicative of the quality and style of the product but may not represent the precise details of the product you receive. This is because we are constantly working to make improvements. For aesthetic reasons, cables and/or electrical elements are often not shown. Refer to technical data sheets for all technical data. Images and colours are not part of any contract or warranty in any way.

Bulbs

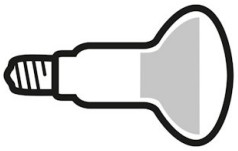

NOT INCLUDED

RF31458

LED Reflector Frosted Lamp E27
13W 2700K R80 Dimmable

©2026 Flos - P.IVA 00290820174 - 10/31/2026

In our constantly evolving world and business, technical upgrades happen every day. This means all product specifications and data are subject to change without warning in order t improve reliability, function, performance or otherwise. We make every effort to ensure the accuracy of our product images, however due to different lighting and screens used for viewing, the colours may vary. Images are indicative of the quality and style of the product but may not represent the precise details of the product you receive. This is because we are constantly working to make improvements. For aesthetic reasons, cables and/or electrical elements are often not shown. Refer to technical data sheets for all technical data. Images and colours are not part of any contract or warranty in any way.

Spare Parts

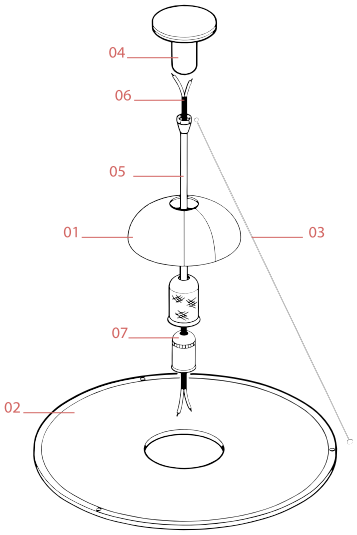

01.	Frisbi Reflector	RF00862
02.	Frisbi Plexiglass diffuser	RF05806
03.	Frisbi steel wires (3 pieces)	RF06823
04.	Frisbi Complete ceiling rose assembly	RF2500100
05.	Frisbi Grid support with stem	RF01439
06.	Frisbi 2x1 2.7 mt black electrical cable	RF29648
07.	New version lamp holder	RF2500200

©2026 Flos - P.IVA 00290820174 - 10/31/2026

In our constantly evolving world and business, technical upgrades happen every day. This means all product specifications and data are subject to change without warning in order t improve reliability, function, performance or otherwise. We make every effort to ensure the accuracy of our product images, however due to different lighting and screens used for viewing, the colours may vary. Images are indicative of the quality and style of the product but may not represent the precise details of the product you receive. This is because we are constantly working to make improvements. For aesthetic reasons, cables and/or electrical elements are often not shown. Refer to technical data sheets for all technical data. Images and colours are not part of any contract or warranty in any way.



RF00862

Frisbi Reflector



RF05806

Frisbi Plexiglass diffuser



RF06823

Frisbi steel wires (3 pieces)



RF2500100

Frisbi Complete ceiling rose assembly



RF01439

Frisbi Grid support with stem



RF29648

Frisbi 2x1 2.7 mt black electrical cable



RF2500200

New version lamp holder

©2026 Flos - P.IVA 00290820174 - 10/31/2026

In our constantly evolving world and business, technical upgrades happen every day. This means all product specifications and data are subject to change without warning in order t improve reliability, function, performance or otherwise. We make every effort to ensure the accuracy of our product images, however due to different lighting and screens used for viewing, the colours may vary. Images are indicative of the quality and style of the product but may not represent the precise details of the product you receive. This is because we are constantly working to make improvements. For aesthetic reasons, cables and/or electrical elements are often not shown. Refer to technical data sheets for all technical data. Images and colours are not part of any contract or warranty in any way.