LINESCAPES PENDANT VERTICAL

A clear and compact light line defines a classic in the world of lighting. Inspired by a special project for a private collection of contemporary art, Linescapes is versatile with a high luminous efficacy guaranteed by its multidirectional linear development.

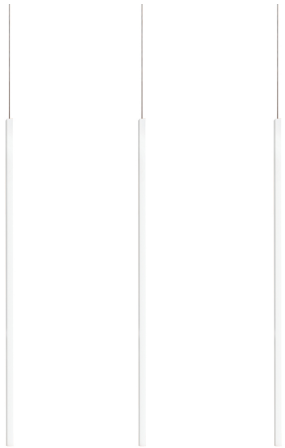

2700K

LAMPING

Source	linear LED
Total power	12W
Emission	diffused side emission
Switching	on/off
Tension	110-240V
Color temperature	2700K
Luminous flux	475lm
Typ CRI	85
IP class	20
Materials	Aluminium + PC + ABS
Notes	cable length max 3m, 360° orientable, side emission, white RAL 9003, black RAL 9005

Codes
LIN LW2 59

Structure
white

PACKAGE

Package 01	Dimension: 15x20x130 cm / Gross weight: 2,7 kg

Certificazioni

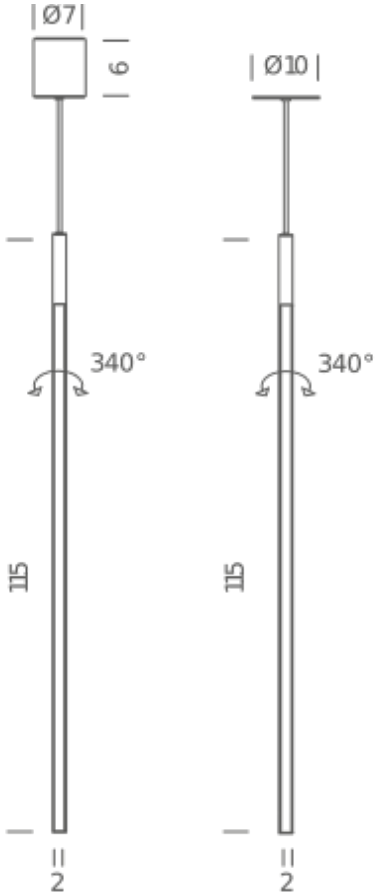

3000K

LAMPING

Source	linear LED
Total power	12W
Emission	diffused side emission
Switching	on/off
Tension	110-240V
Color temperature	3000K
Luminous flux	475lm
Typ CRI	85
IP class	20
Materials	Aluminium + PC + ABS
Notes	cable length max 3m, 360° orientable, side emission, white RAL 9003, black RAL 9005

Codes
LIN LWW 59

Structure
white

PACKAGE

Package 01	Dimension: 15x20x130 cm / Gross weight: 2,7 kg

Certificazioni

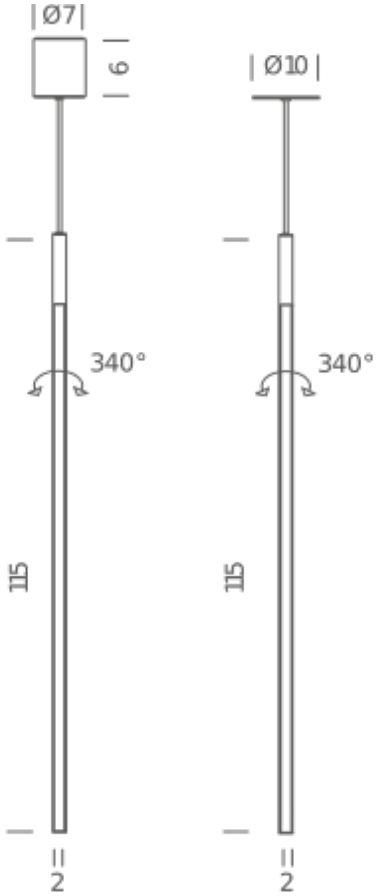

LED RECESSED 2700K

LAMPING

Source	linear LED
Total power	19W
Emission	diffused side emission
Switching	dimmable 1-10V
Tension	110-240V
Color temperature	2700K
Luminous flux	1125lm
Typ CRI	85
Energy class	A+
IP class	20
Materials	Aluminium + PC + ABS
Notes	cable length max 3m, 360° orientable, recessed hole Ø8xHmin 4cm

Codes	*Structure/Diffuser*
LIN LW2 5A	white/white

PACKAGE

Package 01	Dimension: 15x20x130 cm / Gross weight: 2,7 kg

Certificazioni



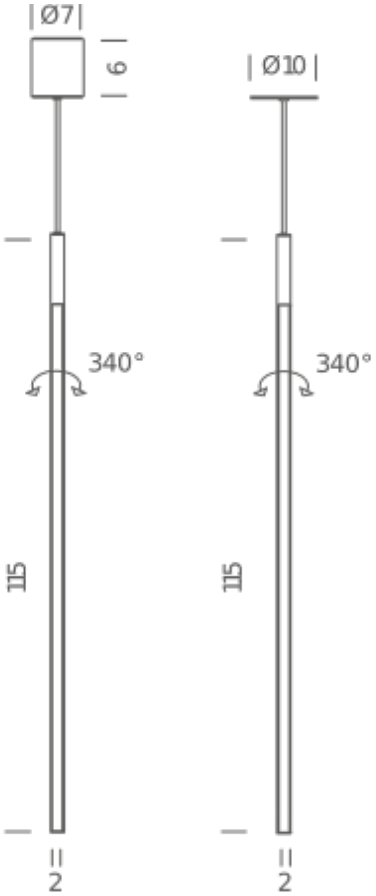

LED RECESSED 3000K

LAMPING

Source	linear LED
Total power	19W
Emission	diffused side emission
Switching	dimmable 1-10V
Tension	110-240V
Color temperature	3000K
Luminous flux	1125lm
Typ CRI	85
IP class	20
Materials	Aluminium + PC + ABS
Notes	cable length max 3m, 360° orientable, side emission, white RAL 9003, black RAL 9005, Recessed: recessed hole Ø8xHmin4cm, DALI version on request (+120€)

Codes	*Structure/Diffuser*
LIN LWW 5A	white/white

PACKAGE

Package 01	Dimension: 15x20x130 cm / Gross weight: 2,7 kg

Certificazioni

