FLOS

F4195009 White

Mini Glo-Ball Suspension

Designed by Jasper Morrison, 2006



Halogen - 25W

Suspension lamp emitting diffused light. Features a diffuser made of externally acid-etched, hand-blown, flashed opaline glass. White injection-moulded PPS lamp-holder support.

Part of the Glo-Ball series by English designer Jasper Morrison, first designed in 1998 to evoke the quiet radiance of a full moon and the otherworldly magic of the night. With its soft, spherical form, Mini Glo Ball Suspension maximises the diffusion of light, casting an even, ambient glow. The design aligns with Morrison's Super Normal philosophy of creating understated yet refined forms to enhance everyday spaces.

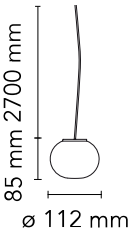

Are you a professional and your project needs consulting and support?

BOOK AN APPOINTMENT

Main specifications

EAN	8059607020074
Mounting	Suspension
Environments	Indoor dry location
Light source type	Bulb
Light sources included	No
Lamp category	Halogen
Lamp holders	G9
Ilcos	HSGS
Number of lamps	1
Power (W)	25

Physical

Colour	White
Length (mm)	120
Cord colour	Clear
Cord length (mm)	2700
Canopy length/diameter (mm)	80
Canopy height (mm)	23
Net weight (kg)	0.45
Package height (mm)	190
Package width (mm)	190
Package length (mm)	190
Package volume (m3)	0.01
IP internal	20

Download

Mounting instructions PDF

Photometric Files

LDT / IES LDT

Technical Drawings

2D ZIP

3D ZIP

©2026 Flos - P.IVA 00290820174 - 10/31/2026

In our constantly evolving world and business, technical upgrades happen every day. This means all product specifications and data are subject to change without warning in order t improve reliability, function, performance or otherwise. We make every effort to ensure the accuracy of our product images, however due to different lighting and screens used for viewing, the colours may vary. Images are indicative of the quality and style of the product but may not represent the precise details of the product you receive. This is because we are constantly working to make improvements. For aesthetic reasons, cables and/or electrical elements are often not shown. Refer to technical data sheets for all technical data. Images and colours are not part of any contract or warranty in any way.

Schematic light drawing

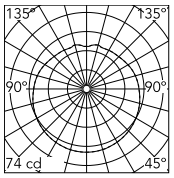

Luminous flux luminaire
460 lm

Photometric

Lighting type	Total
Light distribution	Roto symmetric
Extreme cut off	No

Electrical

Insulation class	II
Frequency (Hz)	50/60
Main voltage (Vac)	220-250
Dimmable	Yes
Dimming interface	Remote Dimmable (Dimmer Not Included)
Batteries inside	No

©2026 Flos - P.IVA 00290820174 - 10/31/2026

In our constantly evolving world and business, technical upgrades happen every day. This means all product specifications and data are subject to change without warning in order t improve reliability, function, performance or otherwise. We make every effort to ensure the accuracy of our product images, however due to different lighting and screens used for viewing, the colours may vary. Images are indicative of the quality and style of the product but may not represent the precise details of the product you receive. This is because we are constantly working to make improvements. For aesthetic reasons, cables and/or electrical elements are often not shown. Refer to technical data sheets for all technical data. Images and colours are not part of any contract or warranty in any way.

Bulbs



NOT INCLUDED

RF36378

LED BiPin Lamp G9 3,2W 2700K Dimmable



NOT INCLUDED

RF26520

LED Lamp 2W 240lm G9 220-240 2700K T13 Non Dimmable

©2026 Flos - P.IVA 00290820174 - 10/31/2026

In our constantly evolving world and business, technical upgrades happen every day. This means all product specifications and data are subject to change without warning in order t improve reliability, function, performance or otherwise. We make every effort to ensure the accuracy of our product images, however due to different lighting and screens used for viewing, the colours may vary. Images are indicative of the quality and style of the product but may not represent the precise details of the product you receive. This is because we are constantly working to make improvements. For aesthetic reasons, cables and/or electrical elements are often not shown. Refer to technical data sheets for all technical data. Images and colours are not part of any contract or warranty in any way.

Spare Parts

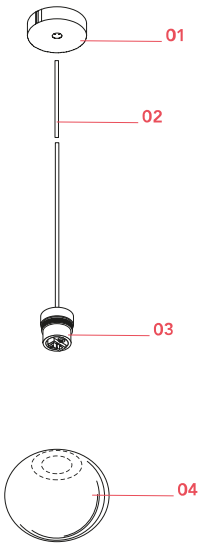

01.	S1 ceiling rose assembly	RF6256001
02.	5 meter sil/fep 2x0,75 transparent electrical cable	RF4190200
03.	G9 5600 lamp holder	RF12818
04.	Mini Glo-Ball Suspension new diffuser assembly	RF4195200

©2026 Flos - P.IVA 00290820174 - 10/31/2026

In our constantly evolving world and business, technical upgrades happen every day. This means all product specifications and data are subject to change without warning in order t improve reliability, function, performance or otherwise. We make every effort to ensure the accuracy of our product images, however due to different lighting and screens used for viewing, the colours may vary. Images are indicative of the quality and style of the product but may not represent the precise details of the product you receive. This is because we are constantly working to make improvements. For aesthetic reasons, cables and/or electrical elements are often not shown. Refer to technical data sheets for all technical data. Images and colours are not part of any contract or warranty in any way.



RF6256001

S1 ceiling rose assembly



RF4190200

5 meter sil/fep 2x0,75 transparent electrical cable



RF12818

G9 5600 lamp holder

RF4195200

Mini Glo-Ball Suspension new diffuser assembly

©2026 Flos - P.IVA 00290820174 - 10/31/2026

In our constantly evolving world and business, technical upgrades happen every day. This means all product specifications and data are subject to change without warning in order t improve reliability, function, performance or otherwise. We make every effort to ensure the accuracy of our product images, however due to different lighting and screens used for viewing, the colours may vary. Images are indicative of the quality and style of the product but may not represent the precise details of the product you receive. This is because we are constantly working to make improvements. For aesthetic reasons, cables and/or electrical elements are often not shown. Refer to technical data sheets for all technical data. Images and colours are not part of any contract or warranty in any way.

FLOS

F3005061 White

Glo-Ball Suspension 1

Designed by Jasper Morrison, 1998

Halogen - 150W

Suspension lamp emitting diffused light. Features a diffuser made of externally acid-etched, hand-blown, flashed opaline glass with a transparent, injection-moulded polycarbonate diffuser support. Rose in 30% fibreglass-reinforced, injection-moulded polyamide with a pressed and galvanised ceiling fitting. Steel suspension cable.

Part of the Glo-Ball series by Jasper Morrison, first designed in 1998 to evoke the quiet radiance of a full moon and the otherworldly magic of the night. With its suspended, spherical form, Glo-Ball Suspension maximises the diffusion of light, casting an even, ambient glow across the room. A sought-after pendant style, the design aligns with Morrison's Super Normal philosophy of creating understated yet refined forms to enhance everyday spaces.

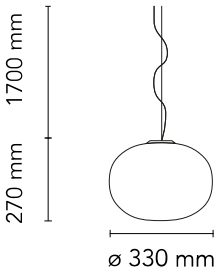

Are you a professional and your project needs consulting and support?

BOOK AN APPOINTMENT

Main specifications

EAN	8059607002193
Mounting	Suspension
Environments	Indoor dry location
Light source type	Bulb
Light sources included	No
Lamp category	Halogen
Lamp holders	E27
Ilcos	HSGS
Number of lamps	1
Power (W)	150

Physical

Colour	White
Length (mm)	330
Cord colour	Clear
Cord length (mm)	1700
Canopy length/diameter (mm)	146
Canopy height (mm)	36
Net weight (kg)	2.55
Package volume (m3)	0.07
IP internal	20

Download

Mounting instructions PDF

Photometric Files

LDT / IES ZIP

Technical Drawings

2D ZIP

3D ZIP

©2026 Flos - P.IVA 00290820174 - 11/6/2026

In our constantly evolving world and business, technical upgrades happen every day. This means all product specifications and data are subject to change without warning in order t improve reliability, function, performance or otherwise. We make every effort to ensure the accuracy of our product images, however due to different lighting and screens used for viewing, the colours may vary. Images are indicative of the quality and style of the product but may not represent the precise details of the product you receive. This is because we are constantly working to make improvements. For aesthetic reasons, cables and/or electrical elements are often not shown. Refer to technical data sheets for all technical data. Images and colours are not part of any contract or warranty in any way.

GWT 850°

IP 20

Schematic light drawing

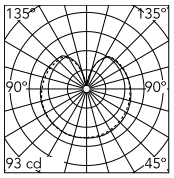

Luminous flux luminaire
1252 lm

Photometric

Lighting type	Total
Light distribution	Roto symmetric
Extreme cut off	No

Electrical

Insulation class	I
Frequency (Hz)	50/60
Main voltage (Vac)	220-250
Dimmable	Yes
Dimming interface	Remote Dimmable (Dimmer Not Included)
Batteries inside	No

©2026 Flos - P.IVA 00290820174 - 11/6/2026

In our constantly evolving world and business, technical upgrades happen every day. This means all product specifications and data are subject to change without warning in order t improve reliability, function, performance or otherwise. We make every effort to ensure the accuracy of our product images, however due to different lighting and screens used for viewing, the colours may vary. Images are indicative of the quality and style of the product but may not represent the precise details of the product you receive. This is because we are constantly working to make improvements. For aesthetic reasons, cables and/or electrical elements are often not shown. Refer to technical data sheets for all technical data. Images and colours are not part of any contract or warranty in any way.

Bulbs



NOT INCLUDED

RF32288

LED Lamp E27 15W 2700K T38



NOT INCLUDED

RF32289

LED Lamp E27 15W 3000K T38

©2026 Flos - P.IVA 00290820174 - 11/6/2026

In our constantly evolving world and business, technical upgrades happen every day. This means all product specifications and data are subject to change without warning in order t improve reliability, function, performance or otherwise. We make every effort to ensure the accuracy of our product images, however due to different lighting and screens used for viewing, the colours may vary. Images are indicative of the quality and style of the product but may not represent the precise details of the product you receive. This is because we are constantly working to make improvements. For aesthetic reasons, cables and/or electrical elements are often not shown. Refer to technical data sheets for all technical data. Images and colours are not part of any contract or warranty in any way.

Spare Parts

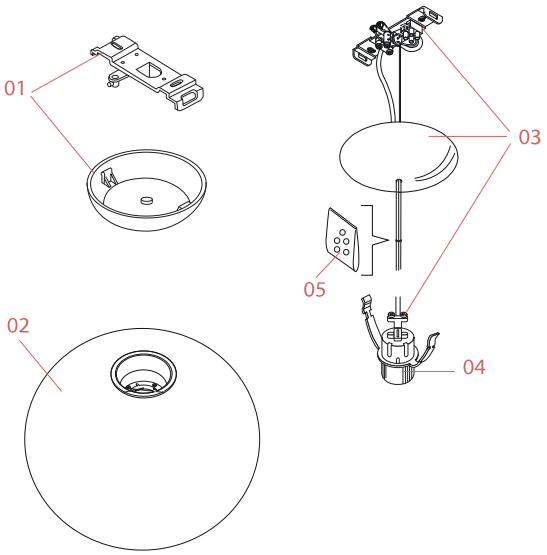

01.	White rose assembly	RA3690209
02.	Glo-Ball Suspension1 white diffuser	F3007061
03.	Glo-ball Suspension 1 electrical wiring assembly	F3006061A
04.	New version lamp holder	RF2500200
05.	Kit of 5 or rings	RF05382

©2026 Flos - P.IVA 00290820174 - 11/6/2026

In our constantly evolving world and business, technical upgrades happen every day. This means all product specifications and data are subject to change without warning in order t improve reliability, function, performance or otherwise. We make every effort to ensure the accuracy of our product images, however due to different lighting and screens used for viewing, the colours may vary. Images are indicative of the quality and style of the product but may not represent the precise details of the product you receive. This is because we are constantly working to make improvements. For aesthetic reasons, cables and/or electrical elements are often not shown. Refer to technical data sheets for all technical data. Images and colours are not part of any contract or warranty in any way.



RA3690209

White rose assembly

F3007061

Glo-Ball Suspension1 white diffuser



F3006061A

Glo-ball Suspension 1 electrical wiring assembly



RF2500200

New version lamp holder

RF05382

Kit of 5 or rings

©2026 Flos - P.IVA 00290820174 - 11/6/2026

In our constantly evolving world and business, technical upgrades happen every day. This means all product specifications and data are subject to change without warning in order t improve reliability, function, performance or otherwise. We make every effort to ensure the accuracy of our product images, however due to different lighting and screens used for viewing, the colours may vary. Images are indicative of the quality and style of the product but may not represent the precise details of the product you receive. This is because we are constantly working to make improvements. For aesthetic reasons, cables and/or electrical elements are often not shown. Refer to technical data sheets for all technical data. Images and colours are not part of any contract or warranty in any way.

FLOS

F3010061 White

Glo-Ball Suspension 2

Designed by Jasper Morrison, 1998



Halogen - 150W

Suspension lamp emitting diffused light. Features a diffuser made of externally acid-etched, hand-blown, flashed opaline glass with a transparent, injection-moulded polycarbonate diffuser support. Rose in 30% fibreglass-reinforced, injection-moulded polyamide with a pressed and galvanised ceiling fitting. Steel suspension cable.

Part of the Glo-Ball series by Jasper Morrison, first designed in 1998 to evoke the quiet radiance of a full moon and the otherworldly magic of the night. With its suspended, spherical form, Glo-Ball Suspension maximises the diffusion of light, casting an even, ambient glow across the room. A sought-after pendant style, the design aligns with Morrison's Super Normal philosophy of creating understated yet refined forms to enhance everyday spaces.

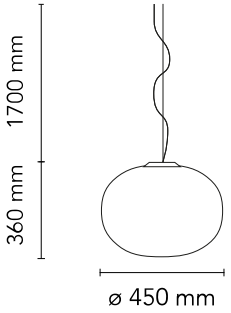

Are you a professional and your project needs consulting and support?

BOOK AN APPOINTMENT

Main specifications

EAN	8059607002223
Mounting	Suspension
Environments	Indoor dry location
Light source type	Bulb
Light sources included	No
Lamp category	Halogen
Lamp holders	E27
Ilcos	HSGS
Number of lamps	1
Power (W)	150

Physical

Colour	White
Length (mm)	450
Cord colour	Clear
Cord length (mm)	1700
Canopy length/diameter (mm)	146
Canopy height (mm)	36
Net weight (kg)	3.65
Package volume (m3)	0.13
IP internal	20

Download

Mounting instructions PDF

Photometric Files

LDT / IES ZIP

Technical Drawings

2D ZIP

3D ZIP

©2026 Flos - P.IVA 00290820174 - 11/6/2026

In our constantly evolving world and business, technical upgrades happen every day. This means all product specifications and data are subject to change without warning in order t improve reliability, function, performance or otherwise. We make every effort to ensure the accuracy of our product images, however due to different lighting and screens used for viewing, the colours may vary. Images are indicative of the quality and style of the product but may not represent the precise details of the product you receive. This is because we are constantly working to make improvements. For aesthetic reasons, cables and/or electrical elements are often not shown. Refer to technical data sheets for all technical data. Images and colours are not part of any contract or warranty in any way.

Schematic light drawing

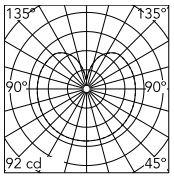

Luminous flux luminaire
1252 lm

Photometric

Lighting type	Total
Light distribution	Roto symmetric
Extreme cut off	No

Electrical

Insulation class	I
Frequency (Hz)	50/60
Main voltage (Vac)	220-250
Dimmable	Yes
Dimming interface	Remote Dimmable (Dimmer Not Included)
Batteries inside	No

©2026 Flos - P.IVA 00290820174 - 11/6/2026

In our constantly evolving world and business, technical upgrades happen every day. This means all product specifications and data are subject to change without warning in order t improve reliability, function, performance or otherwise. We make every effort to ensure the accuracy of our product images, however due to different lighting and screens used for viewing, the colours may vary. Images are indicative of the quality and style of the product but may not represent the precise details of the product you receive. This is because we are constantly working to make improvements. For aesthetic reasons, cables and/or electrical elements are often not shown. Refer to technical data sheets for all technical data. Images and colours are not part of any contract or warranty in any way.

Bulbs



NOT INCLUDED

RF32288

LED Lamp E27 15W 2700K T38

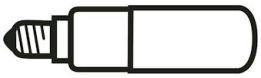

NOT INCLUDED

RF26259

LED Lamp 18W E27 2700K Dimmable



NOT INCLUDED

RF32289

LED Lamp E27 15W 3000K T38

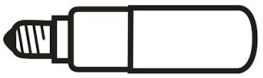

NOT INCLUDED

RF26258

LED Lamp 18W E27 3000K T38 Dimmable

©2026 Flos - P.IVA 00290820174 - 11/6/2026

In our constantly evolving world and business, technical upgrades happen every day. This means all product specifications and data are subject to change without warning in order t improve reliability, function, performance or otherwise. We make every effort to ensure the accuracy of our product images, however due to different lighting and screens used for viewing, the colours may vary. Images are indicative of the quality and style of the product but may not represent the precise details of the product you receive. This is because we are constantly working to make improvements. For aesthetic reasons, cables and/or electrical elements are often not shown. Refer to technical data sheets for all technical data. Images and colours are not part of any contract or warranty in any way.

Spare Parts

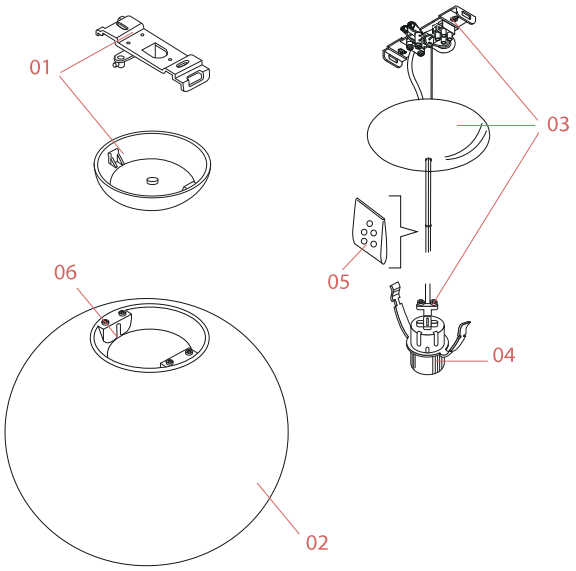

01.	White rose assembly	RA3690209
02.	Glo-Ball Suspension2 white diffuser	F3015061
03.	Glo-Ball Suspension 2 electrical wiring assembly	A2512000A
04.	Glo-Ball Suspension 2 Bjb e27 lamp holder	RF04322
05.	Kit of 5 or rings	RF05382
06.	Glo-Ball Suspension 2 Ring nut assembly for diffuser	RF09514

©2026 Flos - P.IVA 00290820174 - 11/6/2026

In our constantly evolving world and business, technical upgrades happen every day. This means all product specifications and data are subject to change without warning in order t improve reliability, function, performance or otherwise. We make every effort to ensure the accuracy of our product images, however due to different lighting and screens used for viewing, the colours may vary. Images are indicative of the quality and style of the product but may not represent the precise details of the product you receive. This is because we are constantly working to make improvements. For aesthetic reasons, cables and/or electrical elements are often not shown. Refer to technical data sheets for all technical data. Images and colours are not part of any contract or warranty in any way.



RA3690209

White rose assembly



F3015061

Glo-Ball Suspension2 white diffuser



A2512000A

Glo-Ball Suspension 2 electrical wiring assembly



RF04322

Glo-Ball Suspension 2 Bjb e27 lamp holder

RF05382

Kit of 5 or rings



RF09514

Glo-Ball Suspension 2 Ring nut assembly for diffuser

©2026 Flos - P.IVA 00290820174 - 11/6/2026

In our constantly evolving world and business, technical upgrades happen every day. This means all product specifications and data are subject to change without warning in order t improve reliability, function, performance or otherwise. We make every effort to ensure the accuracy of our product images, however due to different lighting and screens used for viewing, the colours may vary. Images are indicative of the quality and style of the product but may not represent the precise details of the product you receive. This is because we are constantly working to make improvements. For aesthetic reasons, cables and/or electrical elements are often not shown. Refer to technical data sheets for all technical data. Images and colours are not part of any contract or warranty in any way.